ACSP2002-VTE, ACSP2002-RPC

20A CompAC Surge Suppressors

Patented cover plate features outlets that rotate 90º for front or side access.

Includes (2) multi-mount brackets and attached cord

Features & Benefits

- Mounts behind flat screens, under counters, in a rack, on a shelf or virtually anywhere with Lowell's exclusive multi-mount brackets (2 - included).
- Offers more amperage - 20A (with attached cord, NEMA 5-20P plug).
- In addition to surge suppression, models include Over/Under Voltage Protection (VTE) or Remote Power Control (RPC).
- ETL Listed, ANSI C62.41 Compliant.
- GSA Grade **A** - Mode **1** - Class **1** Endurance (UL -1449-2 adjunct).
- Suppresses Line to Neutral - NO GROUND CONTAMINATION.
- Defeats surges up to 72,000A using Lowell's exclusive TCR™ surge suppression technology.
- Includes 2 outlets (1 duplex) with patented outlet plate that rotates 90º for front/side access.
- Low profile chassis measures 9"W x 1.75"H x 6"D
- **TEN YEAR WARRANTY**.

Description

Lowell's ***compAC*** Models ACSP2002-VTE and ACSP2002-RPC are small, easy-to-conceal and easy to plug-in surge suppressors for safeguarding sensitive electronics including audio, video, broadcast, computer, DSP, sound recording/reinforcement equipment, and flat panel monitors / TV's. Both are 20-amp units providing the highest current capacity available in devices of this size to protect multiple pieces of equipment on a single circuit. They are equipped with either Voltage Tolerance over/under protection (-VTE) or Remote Power Control (-RPC) and two multi-mount brackets. Most importantly; all offer the confidence of Lowell's industrial strength surge protection with zero failures and ten year warranty. *See also Lowell's 15A CompAC versions and a 15A compAC stic.*

CompAC surge suppressors are 9"W x 1.75"H x 6"D and include Lowell's exclusive TCR™* surge suppression technology to defeat surges up to 72,000 amps. They are GSA Grade **A** - Mode **1** - Class **1** Endurance and Performance tested featuring easy plug-in operation using a NEMA 5-20 cordset and plug. Equipment to be protected simply plugs-in to a 20A duplex outlet that is on a 90º rotating plate (US Patent# D535178S) allowing the outlet to be used on the top or side of the chassis (See Dia. 3). Front LED's provide visual system status. Two multi-mount brackets allow versatile installation on a wall, behind a flat panel TV, under a counter, in a rack, on a shelf or virtually anywhere (see Dia.1).

Model ACSP2002-VTE also features Voltage Tolerance over/under protection; automatically turning receptacles off when line voltage drops below 100V or rises above 140V (see front panel Dia. 2).

Model ACSP2002-RPC also features Remote Power Control by a Lowell low voltage sequencer, switch, or a control system by others that provides a maintained dry contact closure (see Dia. 2 and Dia. 4).

Specifications

Model ACSP2002-VTE - Includes below specs + VTE (Voltage Tolerance Envelope):
VTE is Lowell's Voltage Tolerance, over/under protection feature. It disconnects power from receptacles to prevent equipment damage when line voltage drops below 100 volts or rises above 140 volts. Three LED's provide visual status.

Model ACSP2002-RPC - Includes below specs + RPC (Remote Power Control)
RPC is Lowell's Remote Power Control feature that allows AC power to be controlled with a ***low voltage*** switch contact that is connected to Lowell's SCS Series sequencers or RPS Series remote switches. It includes a test switch, LED for Remote Power Control ON and a terminal block for Switch, Common and V+.

Performance

Operating Voltage / Current	120VAC / 20A, 60Hz
Maximum Surge Current	72,000A (exceeds UL1449-2 6000V, 3000A).
Initial Clamping Voltage	205V, UL rating 330V
Endurance	IEEE C62.41-1991, B3 (C1), Pulses (lifetime): 1kv≥1,000,000; 3kv≥100,000; 6kv≥5000
Transient Noise Reduction	29dB@100kHz, 70dB@1MHz
Response Time	Less than 5 nanoseconds
Temperature Range	25 degrees C (77 degrees F) nominal
Protection Mode	Line to neutral, zero ground leakage
UL1449-2 Adjunct Results	1000 surges, 6000 volts, 3000A, C1 and B3 waveforms (IEEE C62.41), ***No failures***
Federal GSA specs (1996)	Grade A, Class 1, Mode 1
Diagnostic LED's (Surge)*	Top (Green): On = Ground verified, Center (Green): On = Protection active, Bottom (Red): On = Protection reduced*.
Applicable Standards	IEEE standard 587-80 A & B, IEEE standard C62.41-1991, IEC 1000-4-5-1995 (IEC 801-5).
Safety Agency Approvals	ETL Listed. US and Canada

Mechanical

Dimensions / Weight	9"W x 1.75"H x 6"D / 5 lbs.
Input Connections	Cord with NEMA 5-20 plug
Output Connections	(1) Duplex 20A receptacle mounted on 90º rotatable plate.
Chassis	Steel with black powder epoxy paint finish.
Mounting Options	(2) multi-mount brackets for surface or rack installation.

** Only Lowell provides TCR™ surge suppression technology with the assurance of Grade A, Class 1, Mode 1 Endurance and Performance testing plus visual diagnostic LED's. The Ground Verified (Green LED), Protection Active (Green LED) should always be ON and the Reduced Protection (Red LED) should be OFF. In the unlikely event the Red LED illuminates; full suppression capability is NOT immediately or even necessarily compromised. The red LED indicates the Overall Life Expectancy of the unit MAY be reduced. Contact Lowell for repair or replacement under Lowell's TEN YEAR WARRANTY.*

A & E Specifications

The 20A single-circuit surge suppressor shall be Lowell Model ACSP2002-VTE or ACSP2002-RPC with duplex outlet. It shall be ETL Listed (UL 1449-2 adjunct) and endurance tested to GSA Grade **A** - Mode **1** - Class **1** requirements for surge suppressors. It shall meet ANSI C62.41 and protect line to neutral without ground wire contamination. It shall be capable of protecting electronic equipment from transient voltages, spikes and surges. It shall include Lowell's TCR™ surge suppression technology to defeat surges up to 72,000 amps and have a response time of less than 5 nanoseconds. It shall surface or rear rack mount using multi-mount brackets and include (1) duplex outlet mounted on a 90º plate that can be rotated for front or side access. The front shall include three LED's for visual ground verification and surge diagnostics. Model ACSP2002-VTE shall additionally include automatic over/under voltage shut-down protection with LED status when voltage drops below 100V or rises above 140V. Model ACSP2002-RPC shall additionally include remote power control capability by a low voltage sequencer, switch or control system that provides a maintained dry contact closure.

© 01-19-09
Lowell Manufacturing Company • 100 Integram Drive • Pacific, Missouri 63069 U.S.A.
Call 800.325.9660, 636.257.3400 • **Fax** 636.257.6606 • **Click** www.lowellmfg.com
Lowell makes every effort to provide accurate information and reserves the right to change specifications and/or improve manufacturing methods.

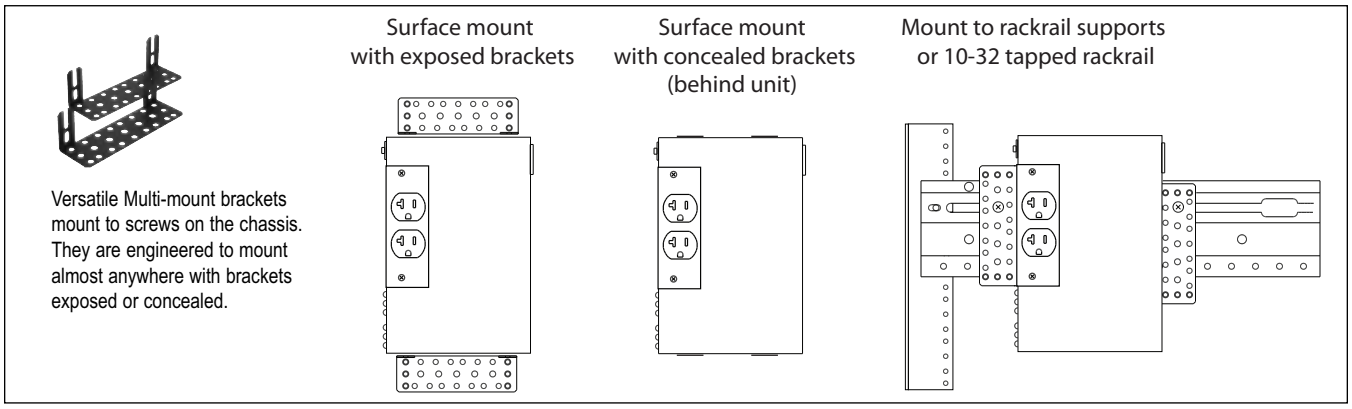

Multi-Mount Bracket Installation (Dia. 1)

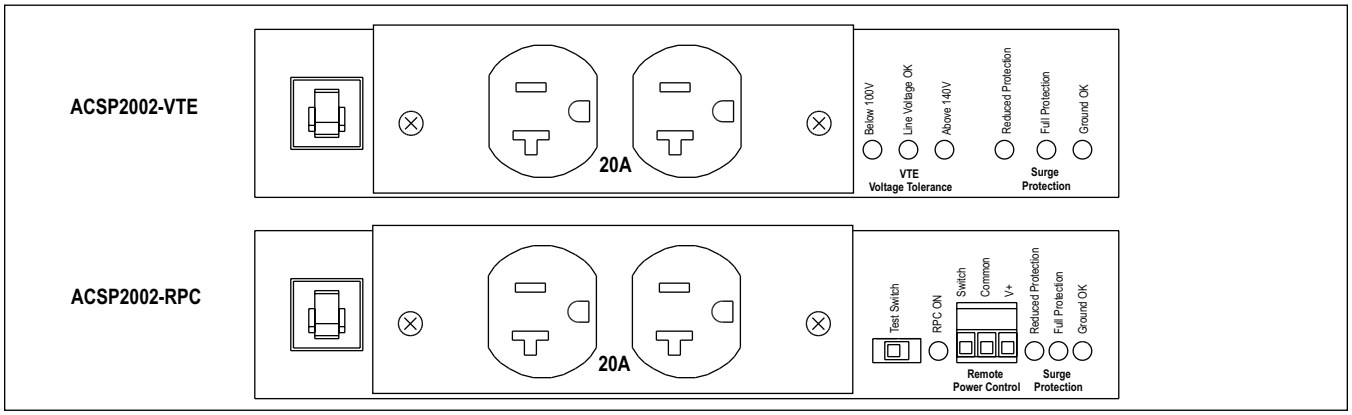

Front Panel Layout (Dia. 2)

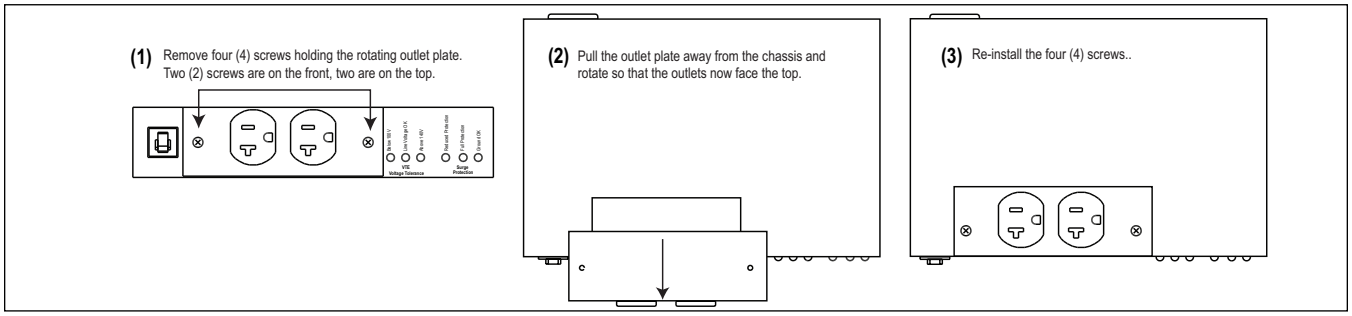

Rotating Outlet - Rotate for front or top access to receptacles (Dia. 3)

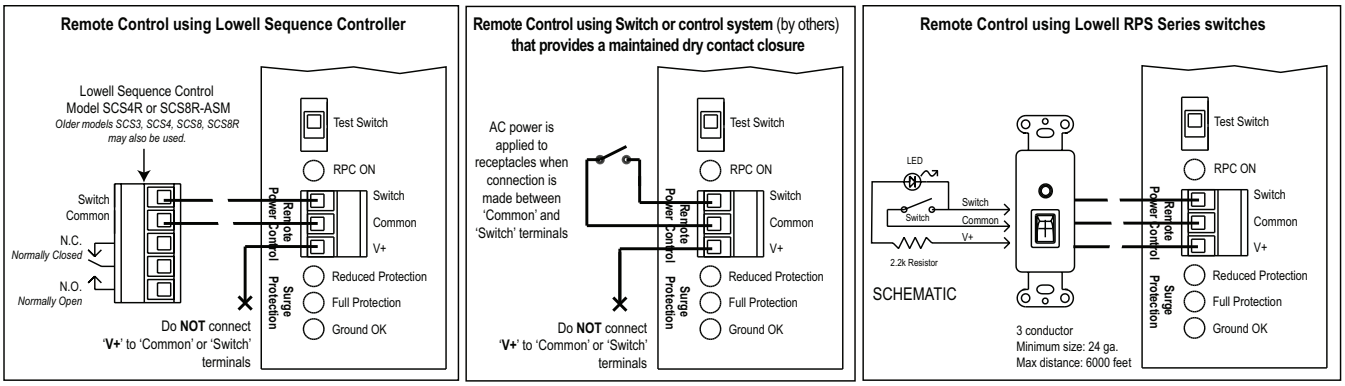

Control Options for ACSP2002-RPC (Dia. 4)