Features

- **Enclosed security shelf is punched to mount RPC Series remote power controls and other chassis-style devices** (see page 2).
- **Rugged 16-gauge US steel with solid front panel.**
- **Supports up to 50 lbs.**
- **Choice of 2RU or 3RU panel space heights.**
- **Finished in durable black powder epoxy.**

Description

Lowell L15E Series shelves are 19"W x 10"D multi-purpose assemblies that feature a welded front closure panel for security and a bottom that is punched for easy screw-mount installation of Lowell's chassis-style audio accessories that are used in many rack applications.

Model L15-310E (2RU) and L15-510E (3RU) are engineered to mount one or multiple chassis-style (non-rackmount) devices by Lowell or others that have a nominal measurement of 3" x 5", 3" x 7" or 5" x 6" (see page 2 for typical layouts). Lowell models that are ideally suited for screw mount installation into the pre-punched holes include: RPC-1 Series remote power controls, MSM momentary switch module, SCS-4 sequential switcher, SMG-1 sound masking generator, RY Series relay modules, ZPM-6 zone paging module, PS1224-2 DC power supply, PST-1 telephone power supply, LA-1 utility amplifier, and TLM-600 impedance-matching transformer.

Shelves are precision formed from 16 gauge US steel and include a welded solid front panel, punched bottom, rear retaining flange (.438"H), rear cable lacing points and side cable openings size 1-1/2"Dia. Shelves mount to the front mounting rails of E.I.A. standard 19"W racks and have a conservative load rating of 50 lbs. Both models include mounting hardware and Lowell's durable powder epoxy finish in smooth black.

A & E Specifications

The shelf for 19"W rackmount use shall be Lowell 10"D Model _____(L15-310E, L15-510E). Shelf shall have a panel space height of ____(2RU, 3RU). It shall include a solid front panel and be punched on the bottom to accept screw mount chassis-style accessories by Lowell and others. It shall have side openings for cable entry and wire-tie slots. It shall be 16-gauge US steel, support up to 50 lbs. and be finished in black powder epoxy.

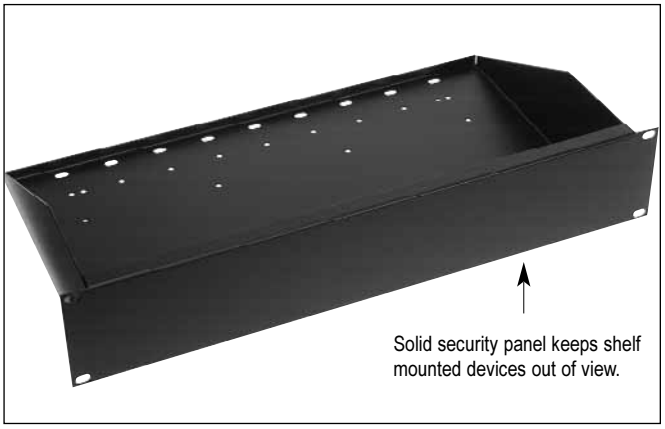

L15-310E

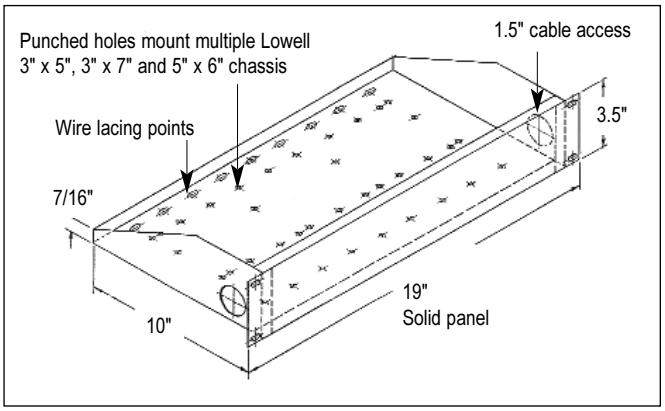

L15-310E

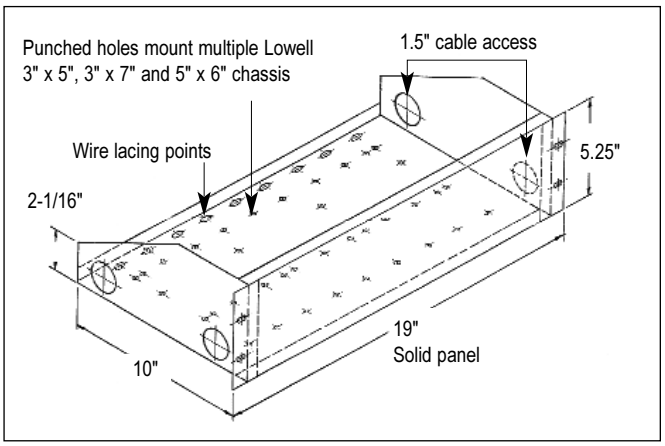

L15-510E

19"W SHELF SPECIFICATIONS

Model	Description	Rack Units (A)	Panel Space (A)	Depth (B)	Useable Width	Weight	Load Rating
L15-310E	Punched shelf with solid front panel	2 RU	3.5"	10"	17.562"	5.5 lbs.	50 lbs.
L15-510E	Punched shelf with solid front panel	3 RU	5.25"	10"	17.562"	6.8 lbs.	50 lbs.

Printed in U.S.A. © 12-8-06
Lowell Manufacturing Company • 100 Integram Drive • Pacific, Missouri 63069 U.S.A.
Call 800.325.9660, 636.257.3400 • **Fax** 636.257.6606 • **Click** www.lowellmfg.com
Lowell makes every effort to provide accurate information and reserves the right to change specifications and/or improve manufacturing methods.
Download and print this spec from www.lowellmfg.com to insure that you have the most current information

Typical Mounting Configurations

Versatile punched shelf Models L15-310E and L15-510E mount a variety of electronic accessories by Lowell and others. Configurations shown below are using Lowell's 3" x 5", 3" x 7" and 5" x 6" chassis-style devices.
Note: All Lowell chassis devices are made to the three sizes shown.

3" x 5" chassis mount 3, 4 or 5 across on punched shelves

RY-2
modular relay

RYPS-1A
powered relay

MSM
momentary switch module

TLM-600
Impedance matching transformer

PST-1
telephone power supply

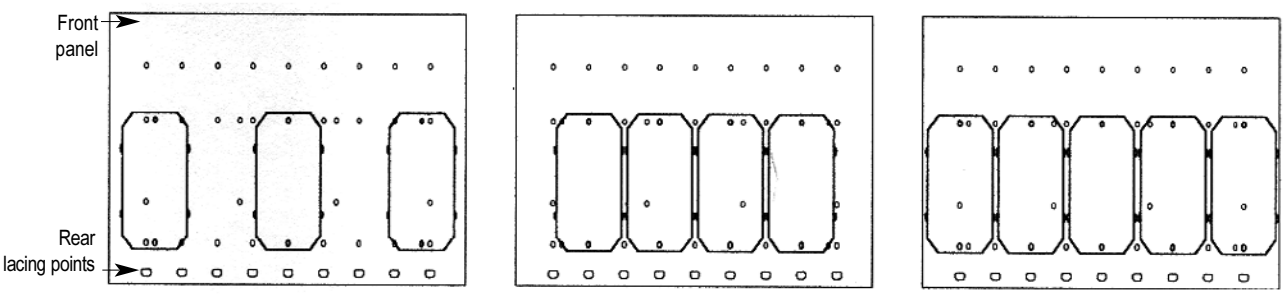

3" x 7" chassis mount 3, 4 or 5 across on punched shelves

RPC-1
remote power controls
(mounts *3RU Model L15-510E only*)

SCS-4
sequential switcher

LA-1
utility amplifier

PS1224-2
DC power supply
(mounts *3RU Model L15-510E only*)

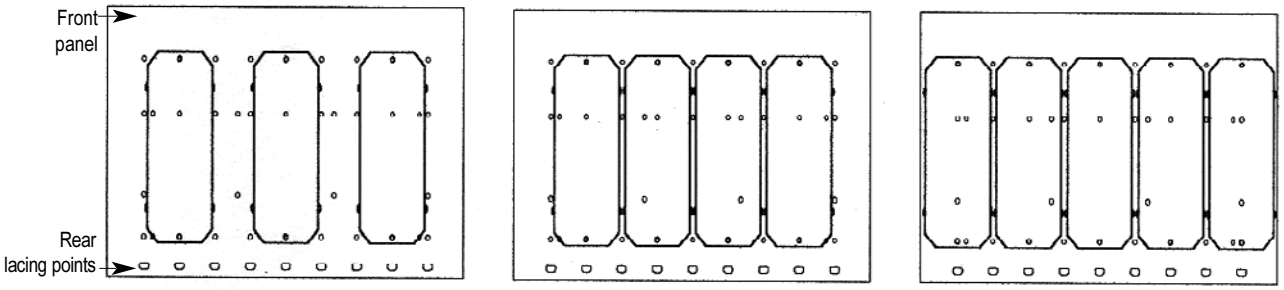

5" x 6" chassis mount 2 across on punched shelves

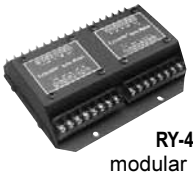
RY-4
modular relay

SMG-1
sound masking generator
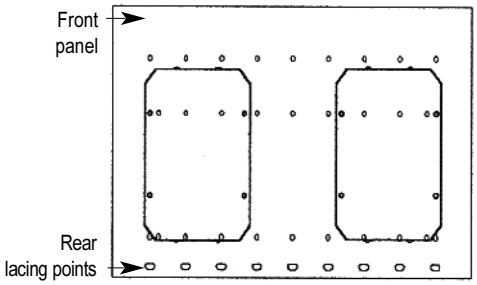
ZPM-6
zone paging module